Skanos Beverage Trolley

Australian designed trolley that is a versatile and lightweight solution for the service of all beverages, especially designed for an Aged Care setting.

Please note: Skanos does not supply the dishwashing trays in image, as standard.

SKANOS BEVERAGE TROLLEY FEATURES:

- Expansive space on top, allowing room for beverage dispensers and other items
- Larger castors with brakes, for ease of mobility
- 2 sturdy handles, at a comfortable height
- S/S rail and overhead shelf with 2 cutouts, allowing a total of 6 off 1/9 GN containers
- Space for 4 off 1/1 x 100 GN containers
- Cutout in the top for 1 off 1/3 GN container designed for rubbish
- Bumper corners on all 4 corners
- The cart frame, constructed from aluminum, ensures the cart remains lightweight.
- Option to wrap the unit with either branding or any imagery you desire.

TECHNICAL INFORMATION

External Dimensions W x D x H (mm)	975 x 565 x 1205
Weight	38kg
Castors	4 off, 2 off with brakes- ⌀140mm
Dish rack capacity (runners)	3
1/1 Gastronorm tray capacity (runners)	4
Equipped with Accessories	3 off 1/1 x 100 GN Translucent container 1 off 1/2 x 100 GN Translucent container 1 off 1/3 x 100 GN Translucent container 6 off 1/9 x 65 GN Translucent container

Product Images

Dimensions

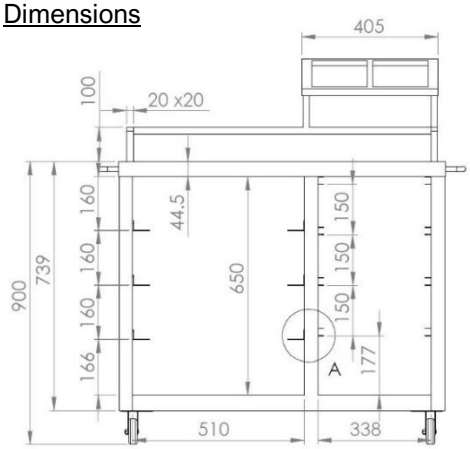

T: 1300 003 822
E: sales@skanos.com.au

www.skanos.com.au

A: Unit 1 Ground Level.
1/7 Airds Rd, Minto NSW